SPHERE600-AL-R-ø22,9-24,7 [P/N: 100872]

The obsta spherical markers are compliant with International Civil Aviation Organisation (ICAO) annex 14 chapter 6 recommendations.



- overall diameter 600mm
- material: aluminium
- Designed for high voltage cable up to 400KV
- No losing parts and easy installation with only 2 screws and draw latches

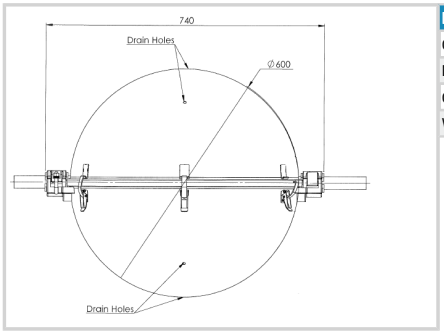

Mechanical Characteristics	
Cable diameter	ø22,90-24,70mm
Maximum cable temperature	250°C peak
Color	red
Weight	6,5kg