Default on IOT :

Track 1 : Lamp TOP
Track 2 : Lamp Mid 1
Track 3 : Lamp Mid 2

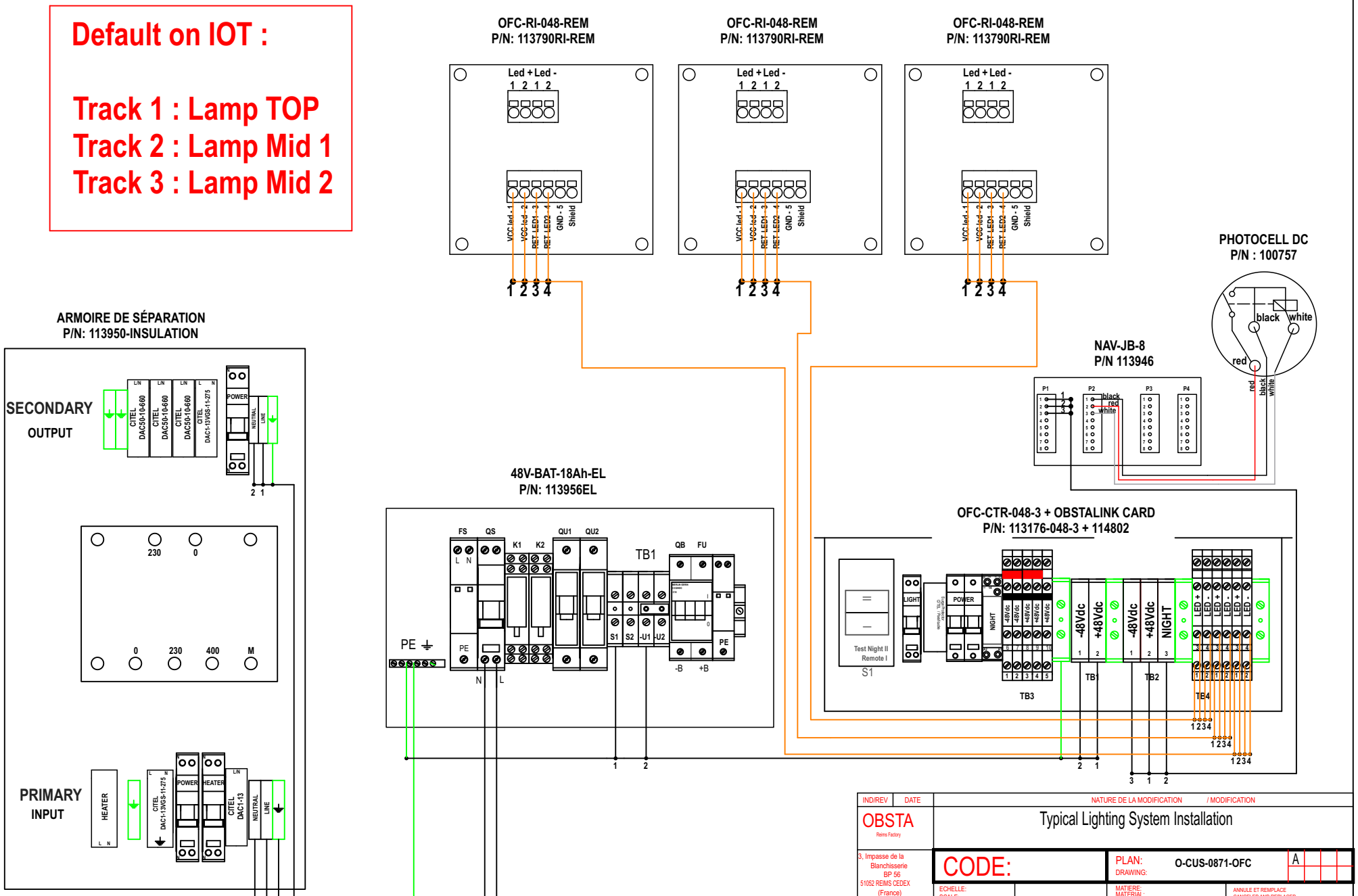

IND/REV	DATE	NATURE DE LA MODIFICATION / MODIFICATION

OBSTA
Reims Factory

3, Impasse de la Blanchisserie
BP 56
51052 REIMS CEDEX
(France)
Tel. 03.26.85.74.00

Typical Lighting System Installation

CODE:

PLAN: O-CUS-0871-OFC
DRAWING:

A

ECHELLE:
SCALE:

MATIERE:
MATERIAL:

ANNULE ET REMPLACE
CANCELED AND REPLACED

REPERE DESSIN REFERENCE DRAWING:	DESSINE PAR DESIGNED BY:	DATE:	VERIFIE PAR CHECKED BY:	DATE:	APPROUVE PAR APPROVED BY:	DATE:	VISA:
	B.SIOZAC	20/02/2026			H.BURGAUD	20/02/2026	

This drawing it covers are the property of OBSTA. This document connot reproducted, copied or cummunicated with third parties without the authorization of OBSTA