COFFRET "ALIMENTATION" 48Vdc 600W
- 2 BALISES -

OBSTA
2 rue Troyon
92316 Sčvres
www.obsta.com

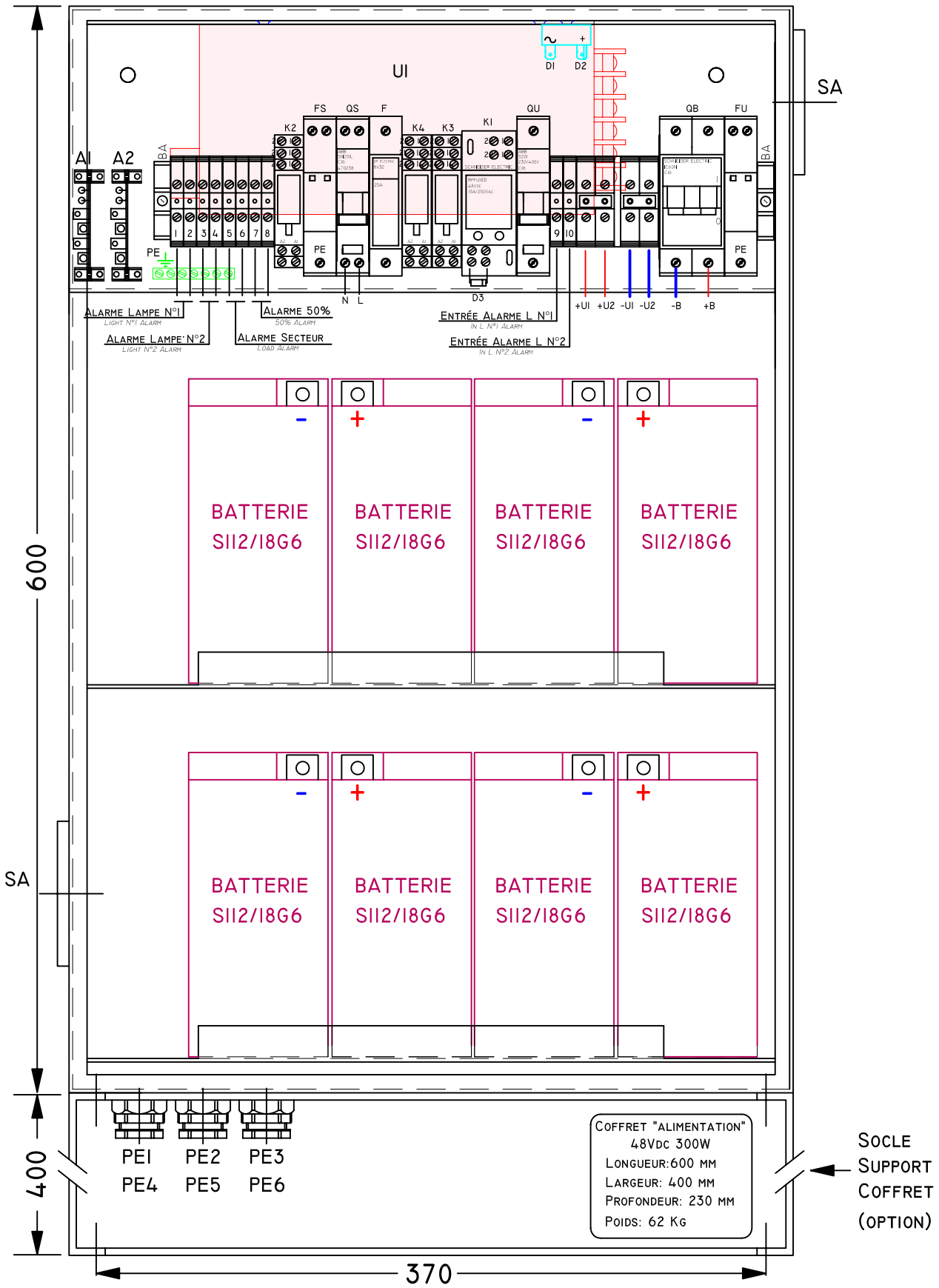

	Ed.1 :	Ed.2 :	Ed.3 :	Ed.4 :	Ed.5 :	E.S :	Echelle / Scale :
Mise à jour : / Update :	11/04/19					Tolérance : / Tolerance : ISO 2768-M	Format : / Size : A4-V
Dessiné par : / Drawing by :	T.BARDOT					Folio	
Vérifié par : / Approved by :	J.CARELLA					1/1	

Coffret "ALIMENTATION" 48VDC 600W

AS 0386.13 PE1

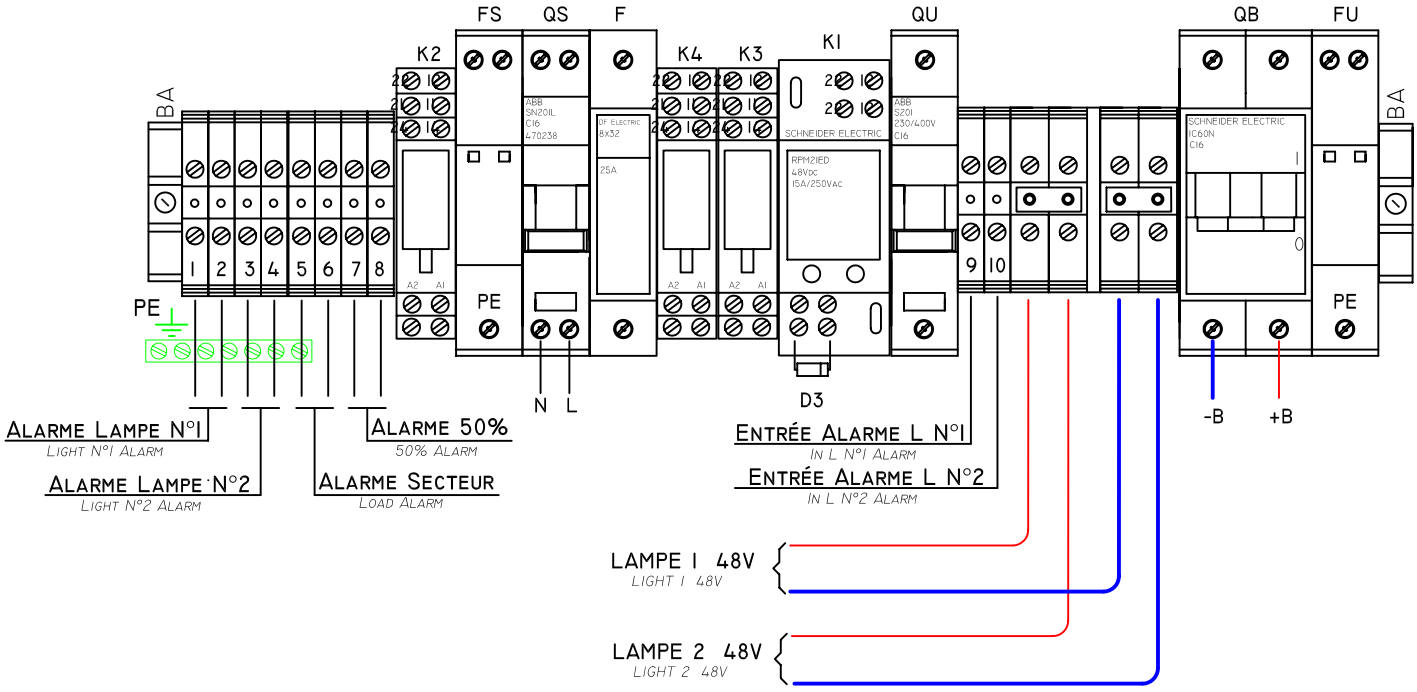

	Ed.1 :	Ed.2 :	Ed.3 :	Ed.4 :	Ed.5 :	E.S :	Echelle / Scale :
Mise à jour : Update :	05/04/19					Tolérance : Tolerance : ISO 2768-M	Format : Size : A4-V
Dessiné par : Drawing by :	T.BARDOT					Folio 1/1	
Vérifié par : Approved by :	J.CARELLA						

Coffret "ALIMENTATION" 48Vdc 600W
Box "Supply" 48Vdc 600W

AS 0386.13 PE2

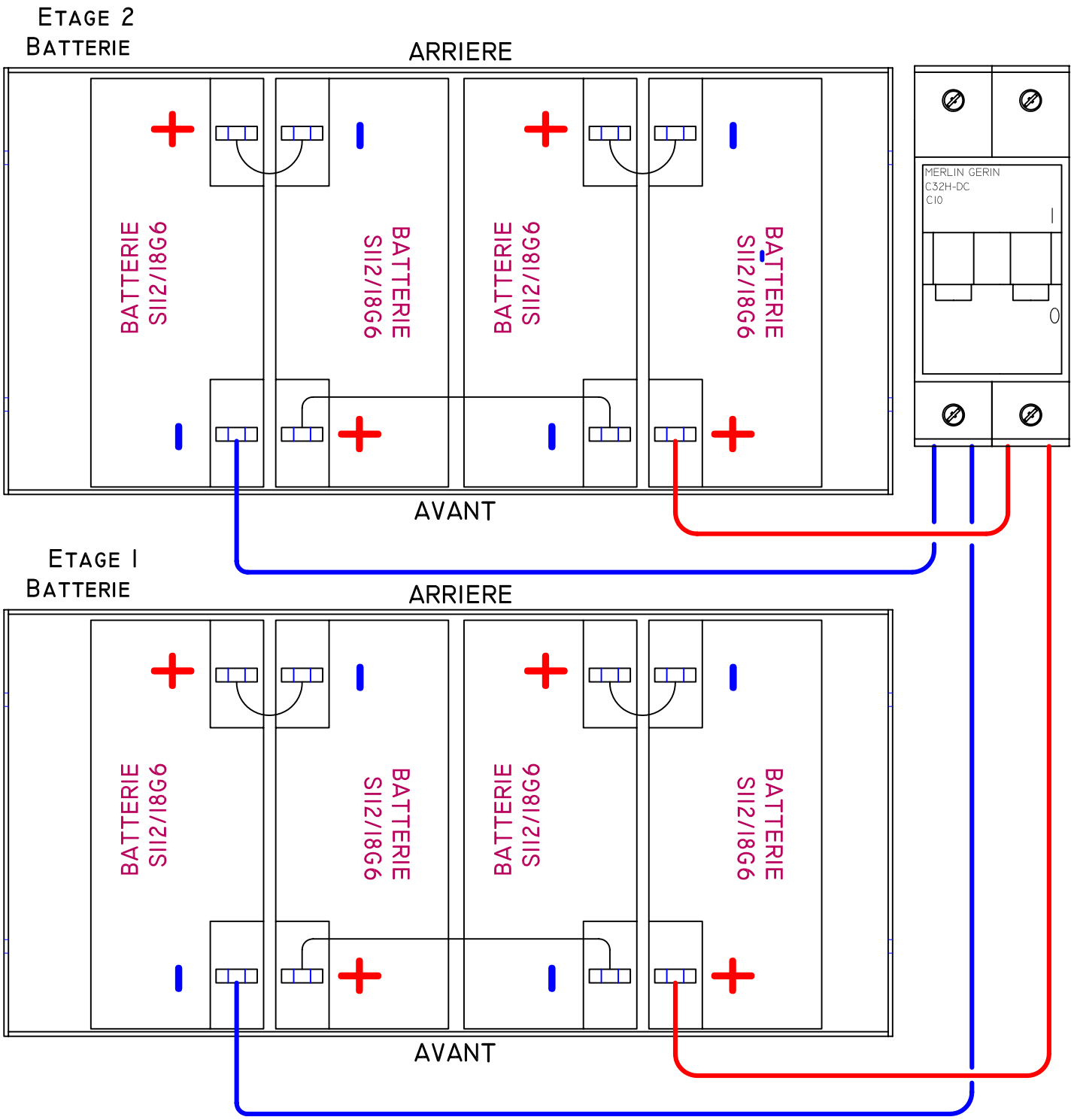

	Ed.1 :	Ed.2 :	Ed.3 :	Ed.4 :	Ed.5 :	E.S :	Echelle / Scale :
Mise à jour : Correction :	11/04/19					Tolérance : Tolerance :	Format Size : A4-V
Dessiné par : Prepared by :	T.BARDOT					Folio	
Vérifié par : Approved by :	J.CARELLA					1/1	

Coffret "ALIMENTATION" 48Vdc 600W
Câblage Batteries

AS 0386.13 P2

Repère	Nb	Désignation	Rèfèrence	*Designation*	Fournisseur
PE	1	**Barrette de masse**	5 plots	*Earth bar*	ABB
FU	1	**Parafoudre**	DS230-48Vdc	*Lighting Protection*	CITEL
FS	1	**Parafoudre**	DS215-230/G	*Lighting Protection*	CITEL
B	8	**Batterie S112/18G6**	12V. 18Ah	*Battery S112/18G6*	POWERFIT
	1	**Rail DIN**	35x15 Long. 310 mm	*DIN Rail*	ERICO
D3	1	**Diode**	1N4004	*Diode*	THOMSON
D1 D2	1	**Pont de diode**	KBPC 3510 5105	*Diode Bridge*	UR
K1	1	**Relais**	48Vdc 2RT RPM21ED	*Relay*	SCHNEIDER
K1	1	**Socle Relais**	RPZF2 RGZL520	*Relay Holder*	SCHNEIDER
K2	1	**Relais**	230Vac	*Relay*	OMRON
K3 K4	2	**Relais**	CR-PO48DC2	*Relay*	ABB
U1	1	**Alimentation 48Vdc 600W**	HRP-600	*48Vdc 600W Power*	MEAN WELL
A2	1	**Carte AL**	RV 1521-1	*AL Card*	SOLARCOM
A1	1	**Carte RVU**	RV 1521-3	*RVU Card*	SOLARCOM
F	1	**Sectionneur Fusible 8x32**	PMX 8x32 25A 485001	*Fuse Holder 8x32*	DF Electric
F	1	**Fusible 8x32**	1A 420501	*Fuse 8x32*	DF Electric
QB	1	**Disjoncteur 2P C16**	C32H-DC C16	*Circuit breaker C16*	MERLIN GERN
QS	1	**Disjoncteur Ph+N C16**	S201 C16	*Circuit breaker Ph+ N C16*	ABB
+U1+U2 -U1-U2	4	**Bornes M6/8**	115 118 11	*Terminal 6/8mm²*	ENTRELEC
1 à 4	4	**Bornes M6/4**	115 116 07	*Terminal 6/4mm²*	ENTRELEC
PE6	1	**Presse étoupe 11**	PG11	*Cable gland 11*	CAPRI
PE1 à PE5	5	**Presse étoupe 13**	PG13	*Cable gland 13*	CAPRI
SA	2	**Ouie d'aération**	87 000	*Ventilation grating*	BRICO
ENV	1	**Coffret NSYS3D6425**	600 x 400 x 230	*Steel box*	SCHNEIDER

MISE A JOUR *UPDATE*	**Ed1 :** 05/04/19	**Ed2 :**	**Ed3 :**	**Ed4 :**	**Ed5 :**	**E.S.**	**FORMAT :** *SIZE :* **A4**
ETABLI PAR: *DRAFT BY:*	T. BARDOT					**FOLIO** 1/1	
VERIFIE PAR: *APPROVED BY:*	J. CARELLA						

COFFRET ALIMENTATION 48Vdc 600W

AS 0386.13 N

600W Single Output with PFC Function

HRP-600 series

■ Features :

- Universal AC input / Full range
- Built-in active PFC function, PF>0.94
- High efficiency up to 89%
- Withstand 300VAC surge input for 5 seconds
- Protections: Short circuit / Overload / Over voltage / Over temperature
- Built-in constant current limiting circuit
- Built-in cooling fan ON-OFF control
- Built-in DC OK signal
- Built-in remote sense function
- All using 105℃ long life electrolytic capacitors
- 5 years warranty

SPECIFICATION

MODEL		HRP-600-3.3	HRP-600-5	HRP-600-7.5	HRP-600-12	HRP-600-15	HRP-600-24	HRP-600-36	HRP-600-48
OUTPUT	DC VOLTAGE	3.3V	5V	7.5V	12V	15V	24V	36V	48V
	RATED CURRENT	120A	120A	80A	53A	43A	27A	17.5A	13A
	CURRENT RANGE	0 ~ 120A	0 ~ 120A	0 ~ 80A	0 ~ 53A	0 ~ 43A	0 ~ 27A	0 ~ 17.5A	0 ~ 13A
	RATED POWER	396W	600W	600W	636W	645W	648W	630W	624W
	RIPPLE & NOISE (max.) Note.2	100mVp-p	100mVp-p	100mVp-p	120mVp-p	150mVp-p	150mVp-p	200mVp-p	240mVp-p
	VOLTAGE ADJ. RANGE	2.8 ~ 3.8V	4.3 ~ 5.8V	6.8 ~ 9V	10.2 ~ 13.8V	13.5 ~ 18V	21.6 ~ 28.8V	28.8 ~ 39.6V	40.8 ~ 55.2V
	VOLTAGE TOLERANCE Note.3	±2.0%	±2.0%	±2.0%	±1.0%	±1.0%	±1.0%	±1.0%	±1.0%
	LINE REGULATION	±0.5%	±0.5%	±0.5%	±0.3%	±0.3%	±0.2%	±0.2%	±0.2%
	LOAD REGULATION	±1.0%	±1.0%	±1.0%	±0.5%	±0.5%	±0.5%	±0.5%	±0.5%
	SETUP, RISE TIME	1800ms, 50ms/230VAC 3600ms, 50ms/115VAC at full load							
	HOLD UP TIME (Typ.)	16ms/230VAC 16ms/115VAC at full load							
INPUT	VOLTAGE RANGE Note.5	85 ~ 264VAC 120 ~ 370VDC							
	FREQUENCY RANGE	47 ~ 63Hz							
	POWER FACTOR (Typ.)	PF>0.94/230VAC PF>0.99/115VAC at full load							
	EFFICIENCY (Typ.)	78.5%	82%	87%	88%	88%	88%	89%	89%
	AC CURRENT (Typ.)	7.6A/115VAC 3.6A/230VAC							
	INRUSH CURRENT (Typ.)	35A/115VAC 70A/230VAC							
	LEAKAGE CURRENT	<1.2mA / 240VAC							
PROTECTION	OVERLOAD	105 ~ 135% rated output power							
		Protection type : Constant current limiting, recovers automatically after fault condition is removed							
	OVER VOLTAGE	3.96 ~ 4.62V	6 ~ 7V	9.4 ~ 10.9V	14.4 ~ 16.8V	18.8 ~ 21.8V	30 ~ 34.8V	41.4 ~ 48.6V	57.6 ~ 67.2V
		Protection type : Shut down o/p voltage, re-power on to recover							
	OVER TEMPERATURE	Shut down o/p voltage, recovers automatically after temperature goes down							
FUNCTION	DC OK SIGNAL	PSU turn on : 3.3 ~ 5.6V ; PSU turn off : 0 ~ 1V							
	FAN CONTROL (Typ.)	Load 35±15% or RTH2≧50℃ Fan on							
ENVIRONMENT	WORKING TEMP.	-40 ~ +70℃ (Refer to "Derating Curve")							
	WORKING HUMIDITY	20 ~ 90% RH non-condensing							
	STORAGE TEMP., HUMIDITY	-40 ~ +85℃, 10 ~ 95% RH non-condensing							
	TEMP. COEFFICIENT	±0.03%/℃ (0 ~ 50℃)							
	VIBRATION	10 ~ 500Hz, 5G 10min./1cycle, 60min. each along X, Y, Z axes							
SAFETY & EMC (Note 4)	SAFETY STANDARDS	UL60950-1, TUV EN60950-1, EAC TP TC 004 approved							
	WITHSTAND VOLTAGE	I/P-O/P:3KVAC I/P-FG:2KVAC O/P-FG:0.5KVAC							
	ISOLATION RESISTANCE	I/P-O/P, I/P-FG, O/P-FG:100M Ohms / 500VDC / 25℃/ 70% RH							
	EMC EMISSION	Compliance to EN55032 (CISPR32) Class B, EN61000-3-2,-3, EAC TP TC 020							
	EMC IMMUNITY	Compliance to EN61000-4-2,3,4,5,6,8,11, EN55024, EN61000-6-2, heavy industry level, criteria A, EAC TP TC 020							
OTHERS	MTBF	140.6K hrs min. MIL-HDBK-217F (25℃)							
	DIMENSION	218*105*63.5mm (L*W*H)							
	PACKING	1.5Kg;8pcs/13Kg/1.34CUFT							

NOTE

1. All parameters NOT specially mentioned are measured at 230VAC input, rated load and 25℃ of ambient temperature.
2. Ripple & noise are measured at 20MHz of bandwidth by using a 12" twisted pair-wire terminated with a 0.1uf & 47uf parallel capacitor.
3. Tolerance : includes set up tolerance, line regulation and load regulation.
4. The power supply is considered a component which will be installed into a final equipment. All the EMC tests are been executed by mounting the unit on a 360mm*360mm metal plate with 1mm of thickness. The final equipment must be re-confirmed that it still meets EMC directives. For guidance on how to perform these EMC tests, please refer to "EMI testing of component power supplies." (as available on http://www.meanwell.com)
5. Derating may be needed under low input voltages. Please check the derating curve for more details.
6. The ambient temperature derating of 3.5℃/1000m with fanless models and of 5℃/1000m with fan models for operating altitude higher than 2000m(6500ft).

■ Mechanical Specification

Case No. 977A Unit:mm

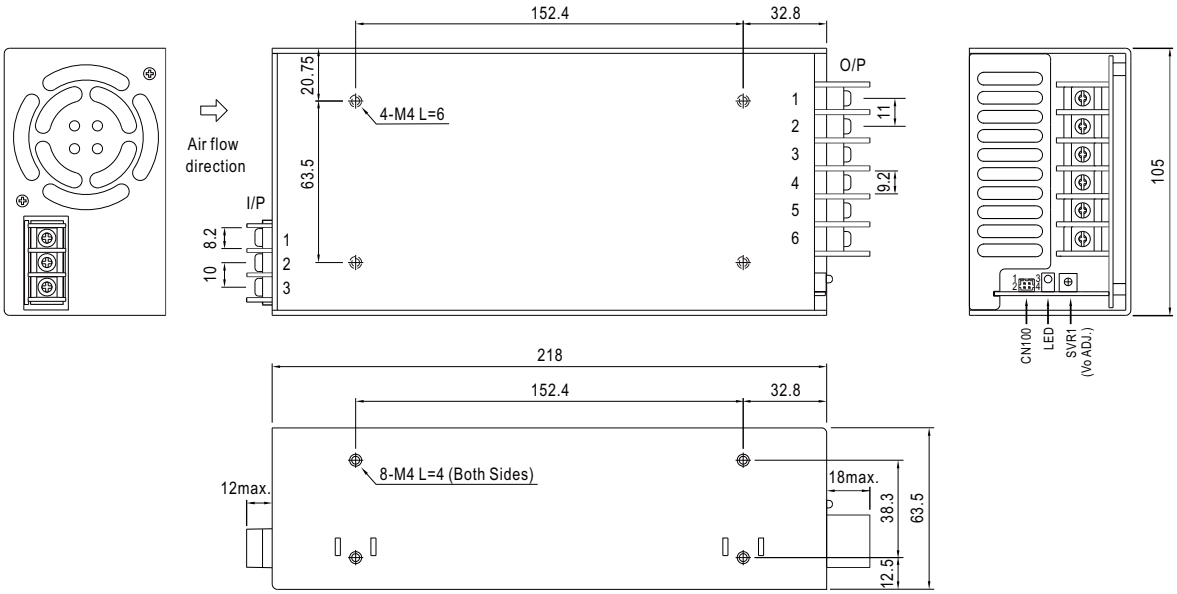

AC Input Terminal Pin No. Assignment

Pin No.	Assignment
1	AC/L
2	AC/N
3	FG ⏚

DC Output Terminal Pin No. Assignment

Pin No.	Assignment
1~3	-V
4~6	+V

Connector Pin No. Assignment(CN100) : HRS DF11-4DP-2DS or equivalent

Pin No.	Assignment	Mating Housing	Terminal
1	DC-OK	HRS DF11-4DS or equivalent	HRS DF11-**SC or equivalent
2	GND		
3	+S		
4	-S		

■ Block Diagram

PWM fosc : 70KHz

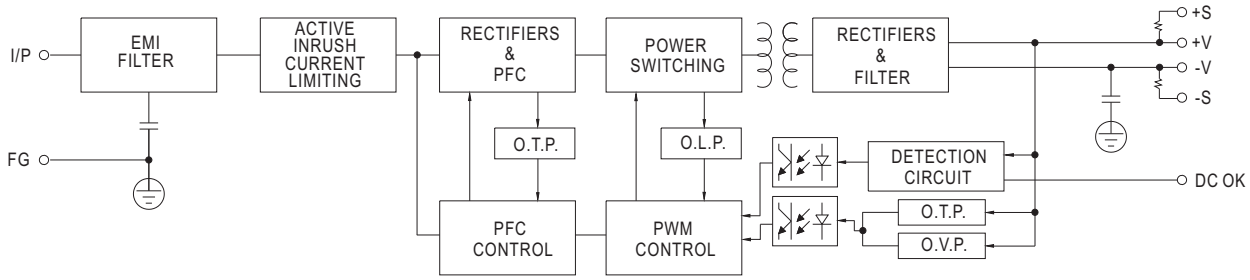

■ Derating Curve

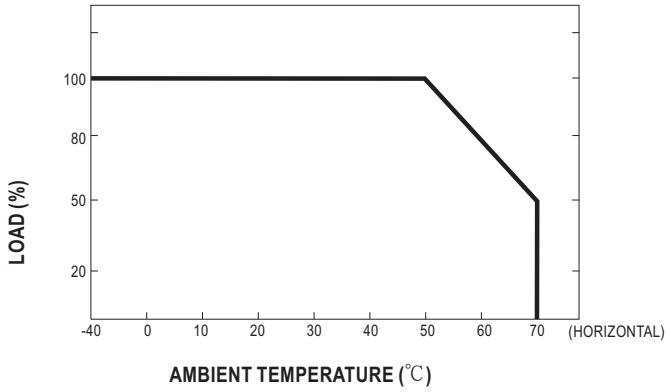

■ Output Derating VS Input Voltage

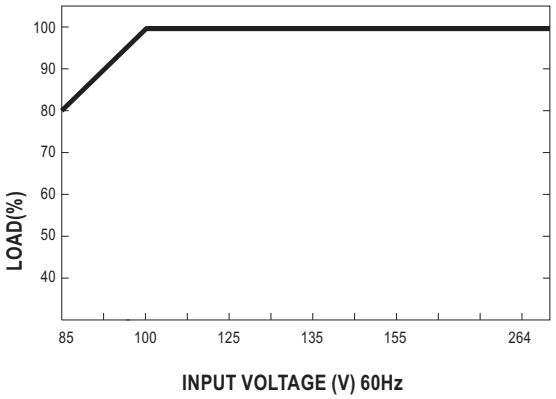

GNB® INDUSTRIAL POWER
A Division of Exide Technologies

Industrial Batteries / Network Power

Powerfit S100

»The **compact energy package**
for **more security**«

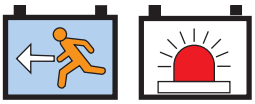

Powerfit®

Powerfit S100

The compact all-rounder

GNB's Powerfit S100 are general purpose batteries designed to deliver high performance in case of power interruptions. They are the ideal solution for applications such as security & alarm systems, emergency lighting, signaling, and any other UPS application where compact and reliable back-up power is key.

Specifications:

- Rechargeable VRLA batteries in which the electrolyte is fixed in a glass mat (with very fine glass fibres)
- Perfect combination of energy storage performance and reliability
- Maintenance-free (no topping up) during the whole service life
- Nominal capacity 1.2 – 38 Ah
- 3-5 years design life at 20 °C ambient temperature (80% re-maining capacity)
- Container in ABS Material
- Designed in accordance with IEC 60896-21/22
- Grid plate construction consisting of a lead calcium alloy
- Low gas emission due to high gas recombination of 99%
- Low self-discharge rate (about 3% / month at 20 °C)
- Trouble-free transport of operational blocks, no restrictions for rail, road, sea and air transportation (IATA, DGR clause A67)
- Completely recyclable

Technical characteristics and data

Type	Part number	Nom-voltage V	Nom. capacity C_{20} 1.80 Vpc 25 °C Ah	C_{10} 1.75 Vpc 25 °C Ah	C_1 1.6 Vpc 25 °C Ah	Length* (l) mm	Width* (b/w) mm	Height* (h) mm	Weight ca. kg	Internal-resistance acc. to IEC 60896-21 mΩ	Max. discharge current f. 5 sec. A	Terminal
S106/1.2 S	NAS10601D2VW0SA	6	1.20	1.14	0.73	97.0	24.0	57.5	0.29	65.0	18.0	S-4.8
S106/4.5 S	NAS10604D5VW0SA	6	4.50	4.27	2.73	70.0	47.0	106	0.81	25.0	67.5	S-4.8
S106/12 SR	NAS1060012VW0RA	6	12.0	11.5	7.54	151	51.0	100	1.80	15.0	180	SR-6.3
S112/1.2 S	NAS11201D2VW0SA	12	1.20	1.14	0.73	97.0	43.0	58.0	0.57	90.0	18.0	S-4.8
S112/1.9 S	NAS11201D9VW0SA	12	1.90	1.80	1.15	178	35.0	65.0	0.87	80.0	28.5	S-4.8
S112/4.5 S	NAS11204D5VW0SA	12	4.50	4.27	2.73	90.0	70.0	107	1.48	40.0	67.5	S-4.8
S112/7.2 S	NAS11207D2VW0SA	12	7.20	6.82	4.44	151	65.0	99.0	2.35	22.0	108	S-4.8
S112/7.2 SR	NAS11207D2VW0RA	12	7.20	6.82	4.44	151	65.0	99.0	2.35	22.0	108	SR-6.3
S112/9 SR	NAS1120009VW0RA	12	9.00	8.06	5.31	151	65.0	99.0	2.45	18.0	127.5	SR-6.3
S112/12 S	NAS1120012VW0SA	12	12.0	11.5	7.54	151	98.0	101	3.50	14.0	180	S-4.8
S112/12 SR	NAS1120012VW0RA	12	12.0	11.5	7.54	151	98.0	101	3.50	14.0	180	SR-6.3
S112/18 G6	NAS1120018VW0BA	12	18.0	17.2	11.3	181.5	77.0	167.5	5.40	16.0	270	G-M6
S112/26 G6	NAS1120026VW0BA	12	26.0	24.8	16.3	166	175	125	8.00	14.0	390	G-M6
S112/38 F6	NAS1120038VW0FA	12	38.0	38.0	23.2	197	165	170	12.20	10.0	456	F-M6

* ±2 mm

Nominal capacity 1.2 – 38 Ah C_{20} | Block battery | Grid plate | Recyclable | Valve regulated lead-acid batteries | Maintenance-free (no topping up)

Powerfit S100

The compact energy source with high performance

Dimensions

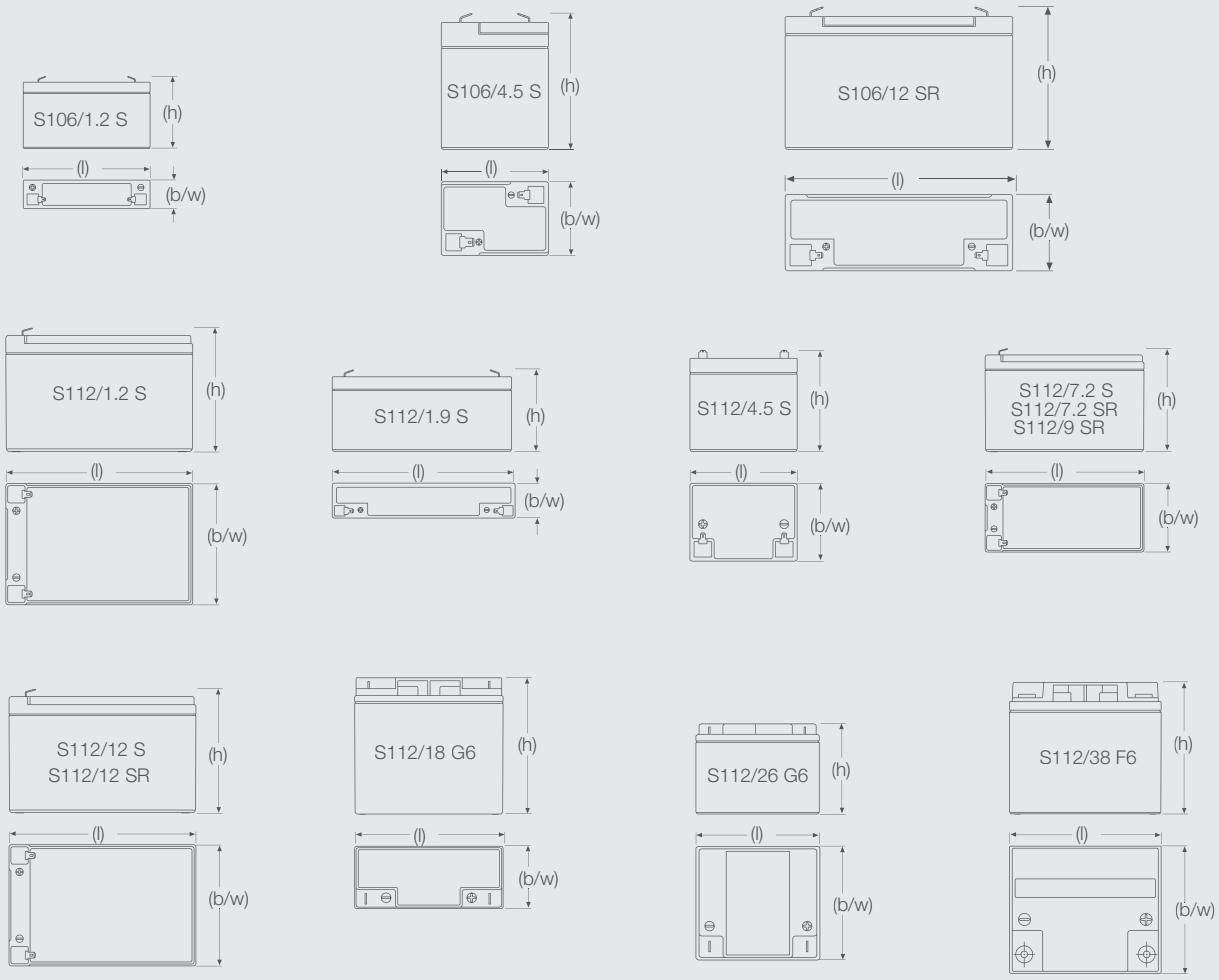

Container and terminal

> **Container:** ABS

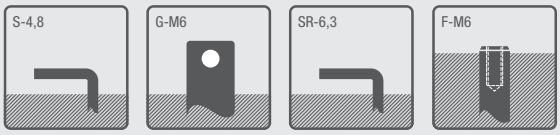

Applications

In addition to their suitability for general applications in security systems, the Powerfit S100 batteries are a reliable energy source for emergency lighting.

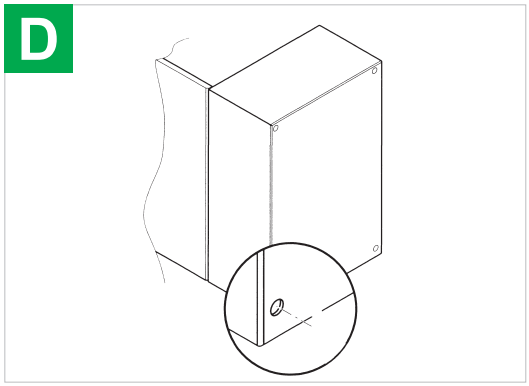

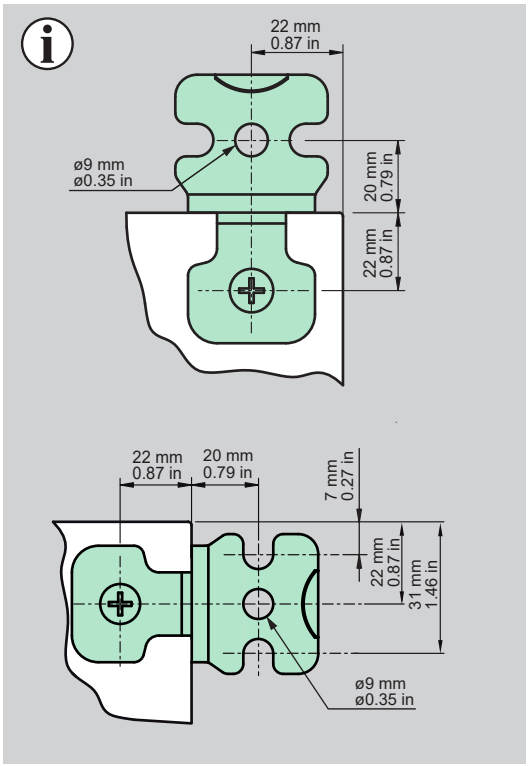

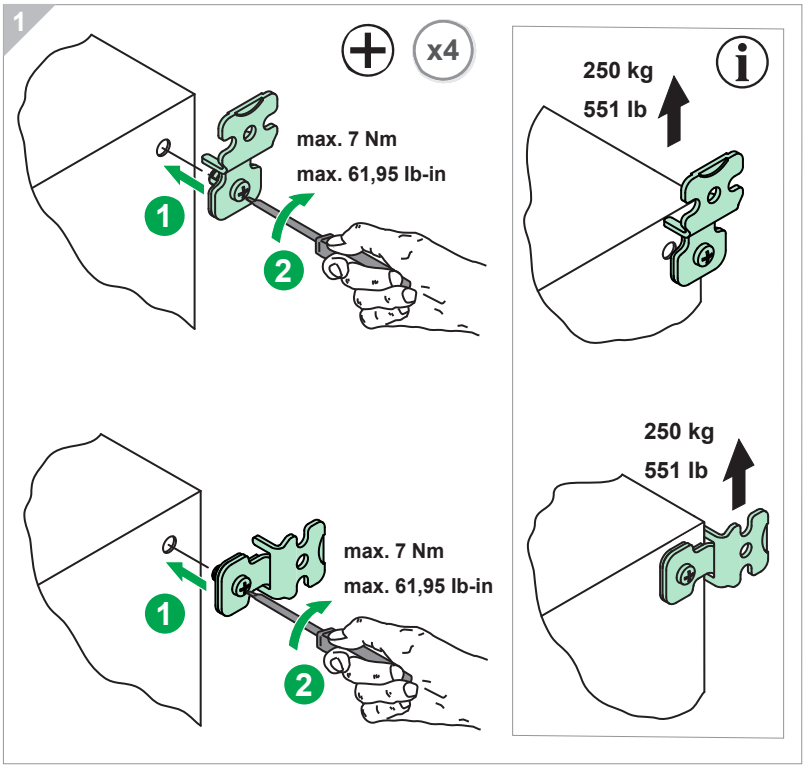

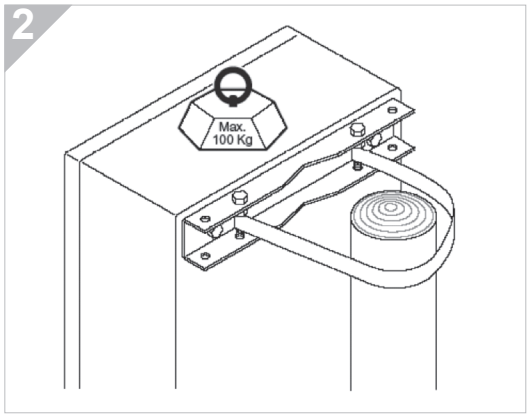

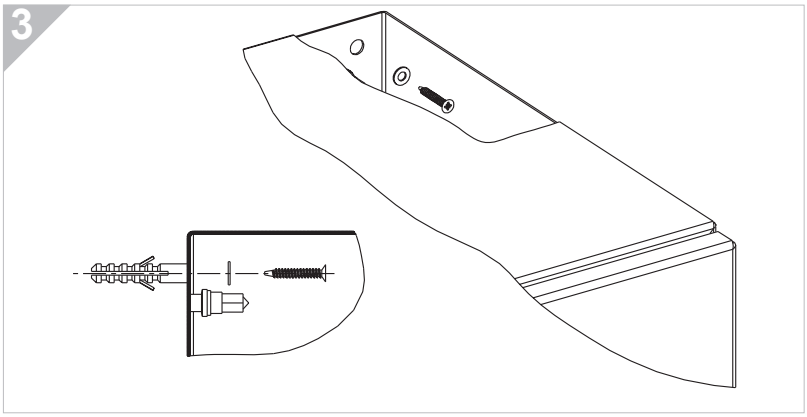

To maintain the same UL type rating, all conduit fittings and other components installed in openings made in the enclosure must have its same ratings and only wall fixing bracket NSYPFCR may be used. When installed as a Type 2 or 3R enclosure, drill a drain hole (3.2 - 6.4 mm (1/8 - ¼ in) diameter) in the lowest part of the bottom wall.

It is the customer responsibility to fulfill requirements of section 19 (Openings) of UL508A Standard and Section 9.6 (Equipment openings)of UL50E Standard.
Il est de la responsabilité du client de respeter les exigences de la section 19 (Openings) de la Norme UL508A et la section 9.6 (Equipment openings) de la norme UL50E

Released for Manufacturing
Printed on 2018/11/14