NAVILITE-48V-CABLE [P/N: 113905]

Red fixed low intensity type A and B

- Light part completely molded with 4 levels of leds
- Redundant circuits for LED's : 16 circuits of 4 LEDs in redundancy
- No rise from the ground potential (due to lightning for example)
- Bird spike

The stainless bracket NAVILITE-HOLDER for mounting shall be order separately

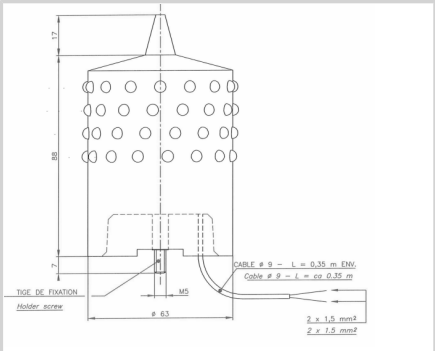

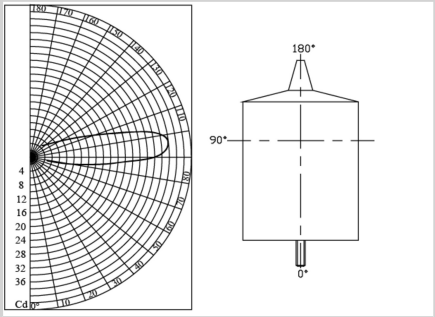

Electrical Characteristics	
Wattage	6 W
Current drawn	125 mA
Life time	~10years
Main voltage	48VDC ± 10%
Mechanical Characteristics	
IP degree	IP67
Wiring	On stripped wires (molded cable lenght 35cm) (2 power wires)
Operating temperature	-40/+60°C
Weight	370g
Size of the light	112mm (height) x 63mm (over diameter)
Attachment	1 screw M5 provided
Photometric Characteristics	
Luminous intensity	> 32cd
Color night time	Red fixed
Vertical beam spread	>10°
Horizontal beam spread	360°
Standards	
Standards compliance	ICAO annexe 14 chapter 6 (8th edition 07/2018), EASA (4th edition 2017)