OFP-360-RW-JBH [P/N: 113731H]

Dual color medium intensity including 6 led projectors P/N113761H with harting connectors and a junction box P/N113748H to be used with complete external power supply 113733

Dual color medium intensity including:

- 6 led projectors made in hard glass and aluminium painted coming wit a molded cable
- a junction box to be used with interconnecting cable
- a support in aluminium painted

This flashhead must be powered through an external obsta power supply

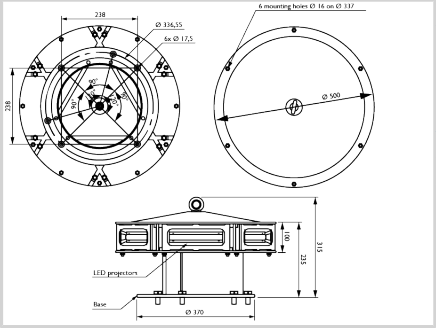

Mechanical Characteristics	
Operating temperature	-40/+55°C
Weight	14kg
Size of the light	315mm (height) x 500mm (diameter)
Attachment	6 mounting holes dia.16mm, dia.337mm circle (FAA standard)
Photometric Characteristics	
Color day/twilight time	white
Color night time	Red or white
Horizontal beam spread	360°